LAIRD MANUFACTURING

"We are the Exception not the Compromise."

VERTICAL TRUCK-MOUNT COMPACT BODY

LAIRD MANUFACTURING

"We are the Exception not the Compromise."

VERTICAL TRUCK-MOUNT COMPACT BODY

[TABLE OF CONTENTS]

VT-475T VERTICAL TRUCK-MOUNT [REPTO] (TWIN-SCREW, COMPACT BODY) **2**

DIAGRAM 2

STANDARD EQUIPMENT DETAILS 3

VT-475T VERTICAL TRUCK-MOUNT [FEPTO] (TWIN-SCREW, COMPACT BODY) **4**

DIAGRAM 4

STANDARD EQUIPMENT DETAILS 5

VT-555T VERTICAL TRUCK-MOUNT [REPTO] (TWIN-SCREW, COMPACT BODY) **6**

DIAGRAM 6

STANDARD EQUIPMENT DETAILS 7

VT-555T VERTICAL TRUCK-MOUNT [FEPTO] (TWIN-SCREW, COMPACT BODY) **8**

DIAGRAM 8

STANDARD EQUIPMENT DETAILS 9

OPTIONS **10**

SPECIFICATION SHEET **11**

VT-475T VERTICAL MIXER TRUCK-MOUNT
[REPTO] (TWIN-SCREW, COMPACT BODY)

VT-475T(R)

[DIAGRAM]

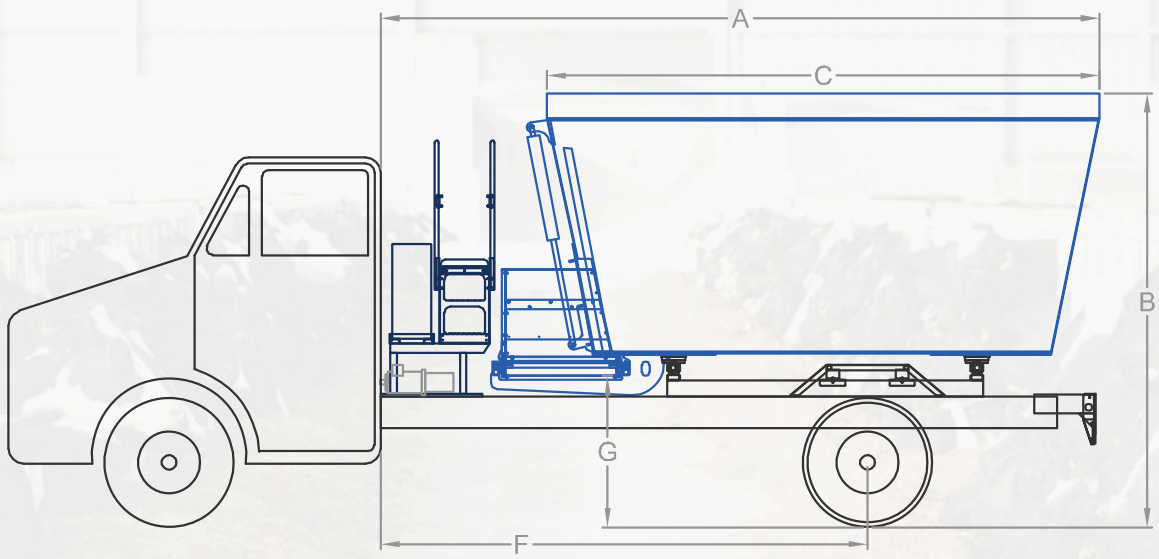

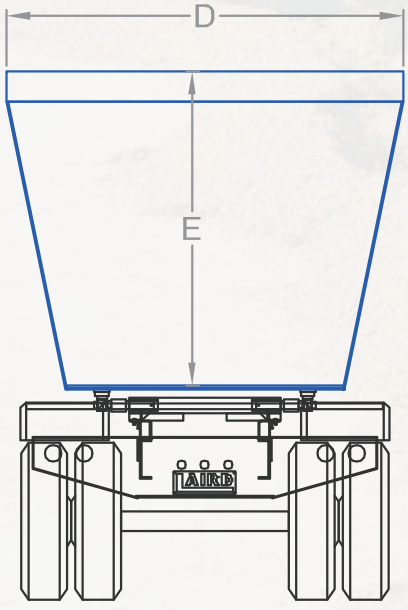

UNIT SPECIFICATIONS		
	NUMBER OF SCREWS	2
	VOLUME (CU.FT.)	490
	MAX LOAD @ 25LBS/CU.FT.	12250
A	OVERALL LENGTH REPTO	225”
B	OVERALL HEIGHT	125”
C	MIXING CHAMBER LENGTH	171”
D	CHAMBER OVERALL WIDTH	99”
E	MIXING CHAMBER DEPTH	69.5”
F	CAB TO TRUNNION REPTO	154”
G	DISCHARGE CLEARANCE (STD. FLAT)	48”
	PIVOT DISCHARGE @ MIN. CLEARANCE	52”
	DISCHARGE CLEARANCE (STD+CHUTE)	35”
	MIN. TRUCK HORSE POWER	300

** ALL RELATED HEIGHTS BASED ON 41½ KENWORTH TRUCK FRAME.*

VT-475T VERTICAL MIXER TRUCK-MOUNT
[REPTO] (TWIN-SCREW, COMPACT BODY)

[STANDARD EQUIPMENT]

1. 490 CUFT Mixing Chamber (70”Side Wall)
2. 5/8” Floor Thickness
3. 3mm Stainless steel on Floor
4. Two Heavy Duty Planetary Gear Boxes Integrated with a 90 Degree Bevel Gear
5. Planetary gearboxes connected by a 55 series driveline
6. Two Vertical Augers with Stainless Steel on the Perimeter
   Stainless Steel Cap (3mm) on the First Three Feet of the Leading Edge
7. Hydraulically Operated Chain Discharge Conveyor in the Front that discharges to the Left Hand Side (Stainless Steel)
8. Hydraulically adjustable Discharge Conveyor on 8 Bearings
9. Single hydrostatic pump with bent axis motor and planetary reducer
10. Electric fan cooling system for hydraulic system and for cooling of planetary reducer and front planetary gearbox
11. Large discharge door located in the front of the mixer
12. 4 X 10,000 lb Capacity Load Bars with 1% Accuracy
13. 18 High Quality Tungsten Blades (2 Piece) or 18 Busatis blades
14. Painted White with Blue Trim
15. 2 Counter Knives
16. Automatic high speed system on start up and for clean out
17. Minus one software controls with Joystick

VT-475T VERTICAL MIXER TRUCK-MOUNT

[FEPTO] (TWIN-SCREW, COMPACT BODY)

VT-475T(F)

[DIAGRAM]

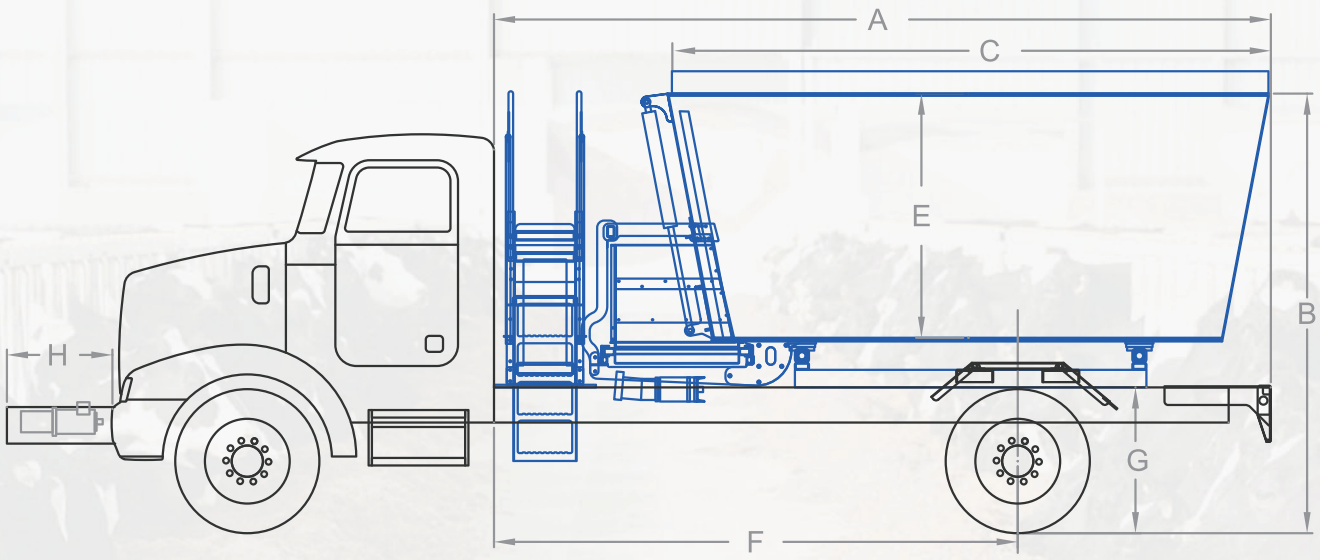

UNIT SPECIFICATIONS		
	NUMBER OF SCREWS	2
	VOLUME (CU.FT.)	490
	MAX LOAD @ 25LBS/CU.FT.	12250
A	OVERALL LENGTH FEPTO	211”
B	OVERALL HEIGHT	125”
C	MIXING CHAMBER LENGTH	171”
D	CHAMBER OVERALL WIDTH	99”
E	MIXING CHAMBER DEPTH	69.5”
F	CAB TO TRUNNION FEPTO	149”
G	DISCHARGE CLEARANCE (STD. FLAT)	48”
H	PUMP MOUNT LENGTH @ FRONT	30”
	PIVOT DISCHARGE @ MIN. CLEARANCE	52”
	DISCHARGE CLEARANCE (STD+CHUTE)	35”
	MIN. TRUCK HORSE POWER	300

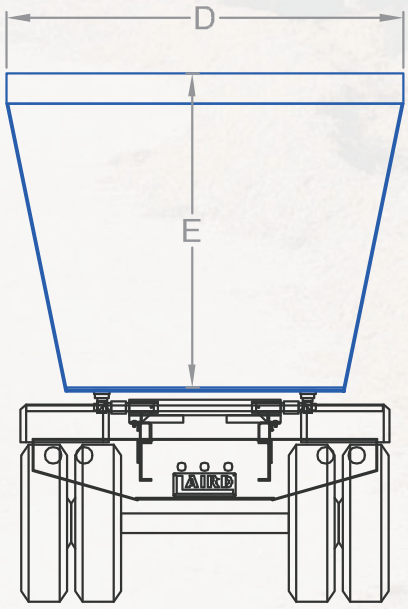

** ALL RELATED HEIGHTS BASED ON 41½ KENWORTH TRUCK FRAME.*

VT-475T VERTICAL MIXER TRUCK-MOUNT
[FEPTO] (TWIN-SCREW, COMPACT BODY)

[STANDARD EQUIPMENT]

1. 490 CUFT Mixing Chamber (70”Side Wall)
2. 5/8” Floor Thickness
3. 3mm Stainless steel on Floor
4. Two Heavy Duty Planetary Gear Boxes Integrated with a 90 Degree Bevel Gear
5. Planetary gearboxes connected by a 55 series driveline
6. Two Vertical Augers with Stainless Steel on the Perimeter
   Stainless Steel Cap (3mm) on the First Three Feet of the Leading Edge
7. Hydraulically Operated Chain Discharge Conveyor in the Front that discharges to the Left Hand Side (Stainless Steel)
8. Hydraulically adjustable Discharge Conveyor on 8 Bearings
9. Single hydrostatic pump with bent axis motor and planetary reducer
10. Electric fan cooling system for hydraulic system and for cooling of planetary reducer and front planetary gearbox
11. Large discharge door located in the front of the mixer
12. 4 X 10,000 lb Capacity Load Bars with 1% Accuracy
13. 18 High Quality Tungsten Blades (2 Piece) or 18 Busatis blades
14. Painted White with Blue Trim
15. 2 Counter Knives
16. Automatic high speed system on start up and for clean out
17. Minus one software controls with Joystick

VT-555T VERTICAL MIXER TRUCK-MOUNT
[REPTO] (TWIN-SCREW, COMPACT BODY)

VT-555T(R)

[DIAGRAM]

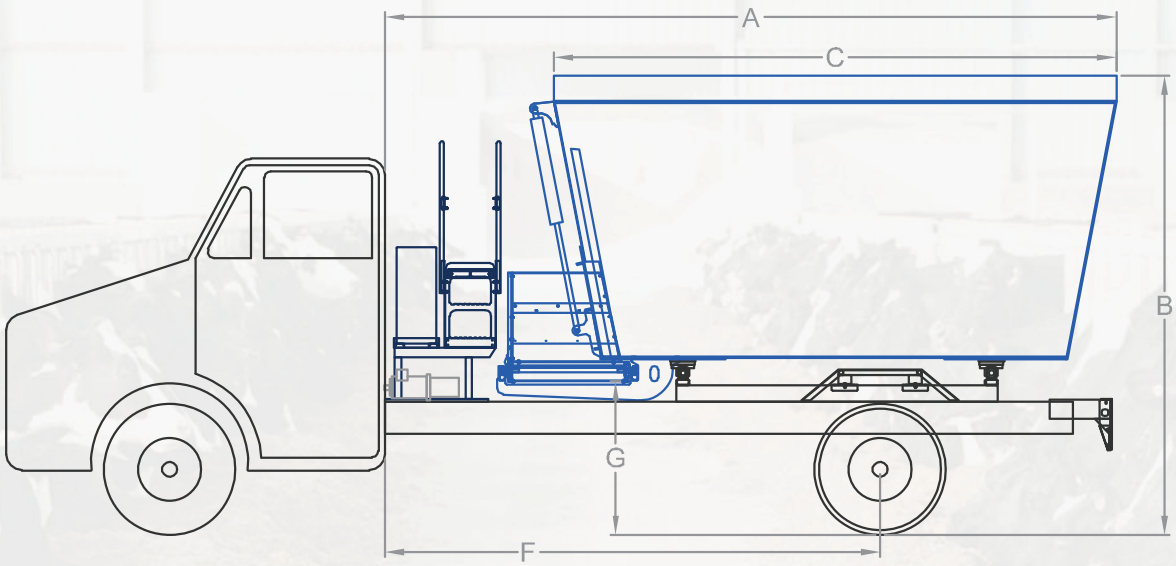

UNIT SPECIFICATIONS		
	NUMBER OF SCREWS	2
	VOLUME (CU.FT.)	631
	MAX LOAD @ 25LBS/CU.FT.	15775
A	OVERALL LENGTH REPTO	227”
B	OVERALL HEIGHT	143”
C	MIXING CHAMBER LENGTH	175”
D	CHAMBER OVERALL WIDTH	103”
E	MIXING CHAMBER DEPTH	87.5”
F	CAB TO TRUNNION REPTO	154”
G	DISCHARGE CLEARANCE (STD. FLAT)	48”
	PIVOT DISCHARGE @ MIN. CLEARANCE	52”
	DISCHARGE CLEARANCE (STD+CHUTE)	35”
	MIN. TRUCK HORSE POWER	300

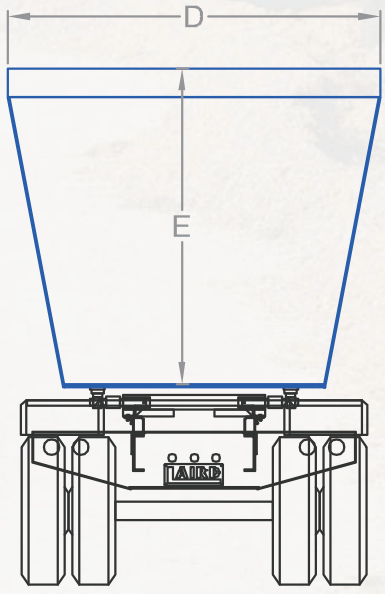

** ALL RELATED HEIGHTS BASED ON 41½ KENWORTH TRUCK FRAME.*

VT-555T VERTICAL MIXER TRUCK-MOUNT
[REPTO] (TWIN-SCREW, COMPACT BODY)

[STANDARD EQUIPMENT]

1. 555 CUFT Mixing Chamber (80”Side Wall)
2. 5/8” Floor Thickness
3. 3mm Stainless steel on Floor
4. Two Heavy Duty Planetary Gear Boxes Integrated with a 90 Degree Bevel Gear
5. Planetary gearboxes connected by a 55 series driveline
6. Two Vertical Augers with Stainless Steel on the Perimeter Stainless Steel Cap (3mm) on the First Three Feet of the Leading Edge
7. Hydraulically Operated Chain Discharge Conveyor in the Front that discharges to the Left Hand Side (Stainless Steel)
8. Hydraulically adjustable Discharge Conveyor on 8 Bearings
9. Single hydrostatic pump with bent axis motor and planetary reducer
10. Electric fan cooling system for hydraulic system and for cooling of planetary reducer and front planetary gearbox
11. Large discharge door located in the front of the mixer
12. 4 X 10,000 lb Capacity Load Bars with 1% Accuracy
13. 18 High Quality Tungsten Blades (2 Piece) or 18 Busatis blades
14. Painted White with Blue Trim
15. 2 Counter Knives
16. Automatic high speed system on start up and for clean out
17. Minus one software controls with Joystick

VT-555T VERTICAL MIXER TRUCK-MOUNT
[FEPTO] (TWIN-SCREW, COMPACT BODY)

VT-555T(F)

[DIAGRAM]

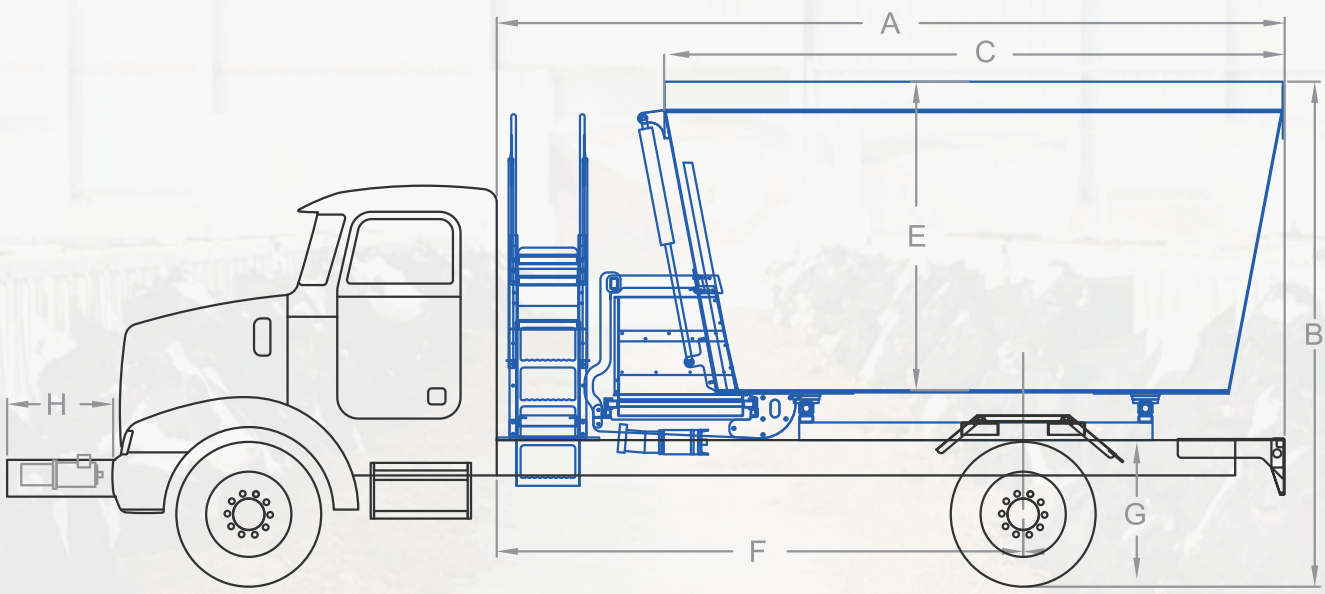

UNIT SPECIFICATIONS		
	NUMBER OF SCREWS	2
	VOLUME (CU.FT.)	631
	MAX LOAD @ 25LBS/CU.FT.	15775
A	OVERALL LENGTH FEPTO	223”
B	OVERALL HEIGHT	143”
C	MIXING CHAMBER LENGTH	175”
D	CHAMBER OVERALL WIDTH	103”
E	MIXING CHAMBER DEPTH	87.5”
F	CAB TO TRUNNION FEPTO	149”
G	DISCHARGE CLEARANCE (STD. FLAT)	48”
H	PUMP MOUNT LENGTH @ FRONT	30”
	PIVOT DISCHARGE @ MIN. CLEARANCE	52”
	DISCHARGE CLEARANCE (STD+CHUTE)	35”
	MIN. TRUCK HORSE POWER	300

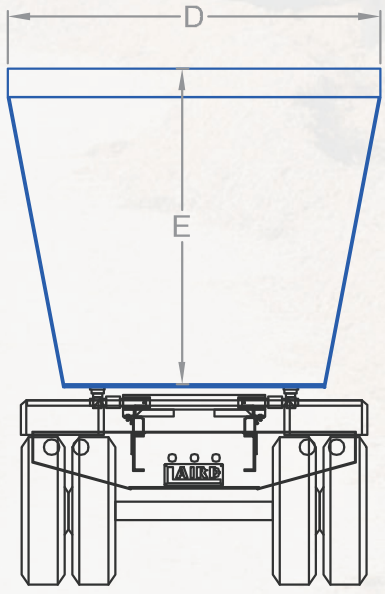

** ALL RELATED HEIGHTS BASED ON 41½ KENWORTH TRUCK FRAME.*

VT-555T VERTICAL MIXER TRUCK-MOUNT
[FEPTO] (TWIN-SCREW, COMPACT BODY)

[STANDARD EQUIPMENT]

1. 555 CUFT Mixing Chamber (80”Side Wall)
2. 5/8” Floor Thickness
3. 3mm Stainless steel on Floor
4. Two Heavy Duty Planetary Gear Boxes Integrated with a 90 Degree Bevel Gear
5. Planetary gearboxes connected by a 55 series driveline
6. Two Vertical Augers with Stainless Steel on the Perimeter Stainless Steel Cap (3mm) on the First Three Feet of the Leading Edge
7. Hydraulically Operated Chain Discharge Conveyor in the Front that discharges to the Left Hand Side (Stainless Steel)
8. Hydraulically adjustable Discharge Conveyor on 8 Bearings
9. Single hydrostatic pump with bent axis motor and planetary reducer
10. Electric fan cooling system for hydraulic system and for cooling of planetary reducer and front planetary gearbox
11. Large discharge door located in the front of the mixer
12. 4 X 10,000 lb Capacity Load Bars with 1% Accuracy
13. 18 High Quality Tungsten Blades (2 Piece) or 18 Busatis blades
14. Painted White with Blue Trim
15. 2 Counter Knives
16. Automatic high speed system on start up and for clean out
17. Minus one software controls with Joystick

[OPTIONS: VT-475T, VT-555T VERTICAL MIXER]

OPTIONS

1. Mounting on Truck
2. Floor thickness Upgrade from 5/8" to ¾"
3. Upgrade of Stainless Steel on Floor (3mm to 5mm)
4. Stainless Steel Option: (on the Sides 5FT High): **2 mm | 2.5 mm | 3.0 mm**
5. Viewing Platform
6. Rear Door Discharge for Premix
7. Scale Installation
8. Extra Kicker (per Auger)
9. Heavy Duty Bumper
10. Rear light and feeding light
11. Mud flaps and hangers
12. Stop, turn, tail and Back-up Lights
13. Stop, turn, tail and Back-up Lights (LED Option)
14. 8" Cut Out Option (Per Side)
15. Camera and Monitor
16. Extra Camera
17. Base Magnets on Slide Chute
18. Non-Standard Paint Color
19. Door Indicator Gauge: **(For One Door) | Additional Doors (each)**
20. Hydraulic Folding Spout
21. Hydraulic Folding Spout **with Magnets**
    Hydraulic Folding Spout with Magnets + Rubber belt
22. Discharge Extension Option: **(6 inch) | (12 inch) | (18 inch)**
23. Front-mounted Hydrostat Option
24. 6" of Stainless Steel **(3mm)** Lining on each Auger
    6" of Stainless Steel **(5mm)** Lining on each Auger
25. Complete Stainless Steel Lining **(3mm)** on each Auger
    Complete Stainless Steel Lining **(5mm)** on each Auger
26. Dogleg Discharge Conveyor Standard (79"+30")
    Extended Dogleg Discharge Conveyor (90"+30")
27. Discharge overhead support brackets
28. UHMW Plastic Rails on Discharge
29. C2082H Roller Chain (Up-charge)

[SPECIFICATION SHEET: VT-475T, VT-555T VERTICAL MIXER]

Customer Name: _____ **Company Name:** _____

Date: _____ **Model:** _____

	Options	Yes	Price
BASE PRICE			
1	Mounting on Truck		
2	Floor Thickness Upgrade from 5/8" to ¾"		
3	Upgrade of Stainless Steel on Floor (3mm to 5mm)		
4	Stainless Steel Option(on the sides 5FT High) ____**2mm** ____**2.5mm** ____**3.0mm**		
5	Viewing Platform		
6	Rear Door Discharge for Premix		
7	Scale Installation		
8	Extra Kicker **(per Auger)**		
9	Heavy Duty Bumper		
10	Rear light and feeding light		
11	Mud flaps and hangers		
12	Stop, turn, tail and Back-up Lights		
13	Stop, turn, tail and Back-up Lights **(LED Option)**		
14	8" cut-out Option **(Per side)**		
15	Camera and Monitor		
16	Extra Camera		
17	Base Magnets on Slide Chute		
18	Non-Standard Paint Color _____ Custom Decals _____		
19	Door Indicator Gauge _____for one door _____ additional doors		
20	Hydraulic Folding Spout		
21	Hydraulic Folding Spout _____with Magnets _____ w/Magnets + Rubber Belt		
22	Discharge Extension Option ____**6"** _____**12"** _____**18"**		
23	Front-mounted Hydrostat Option		
24	6" of Stainless Steel Lining on each Auger _____**3mm** _____**5mm**		
25	Complete Stainless Steel Lining on each Auger _____**3mm** _____**5mm**		
26	Dogleg Discharge Conveyor Standard _____ (79" + 30") _____ Extended (90" + 30")		
27	Discharge Overhead Support Brackets		
28	UHMW Plastic Rails on Discharge		
29	C2082H Roller Chain (Upgrade)		
Scale System:	Indicator _____ Remote _____ 2nd Remote _____ Other Scale Options _____ **Blade Option:** 2-piece _____ Busatis _____ Feedlot Backing Plate _____		
Credit For:	_____ No Discharge Conveyor _____No Front Door _____ No St Steel Liner on Floor		( )
Comments:			

SPECS

Every Laird Product
Is *Custom Built* For You.

531 S. Hwy. 59 I Merced, CA 95341
P: (209) 722-4145 I F: (209) 349-8934
sales@ lairdmfg.com I *www.lairdmfg.com*